Dimension Guide

Built-in single oven

700 MealAssist

Model:
EVEP6816BF

Dimensions

	width	height	depth
Underbench (mm)	560	600	550
Cabinet (mm)	560	590	550
Product (mm)	595	594	567

Underbench

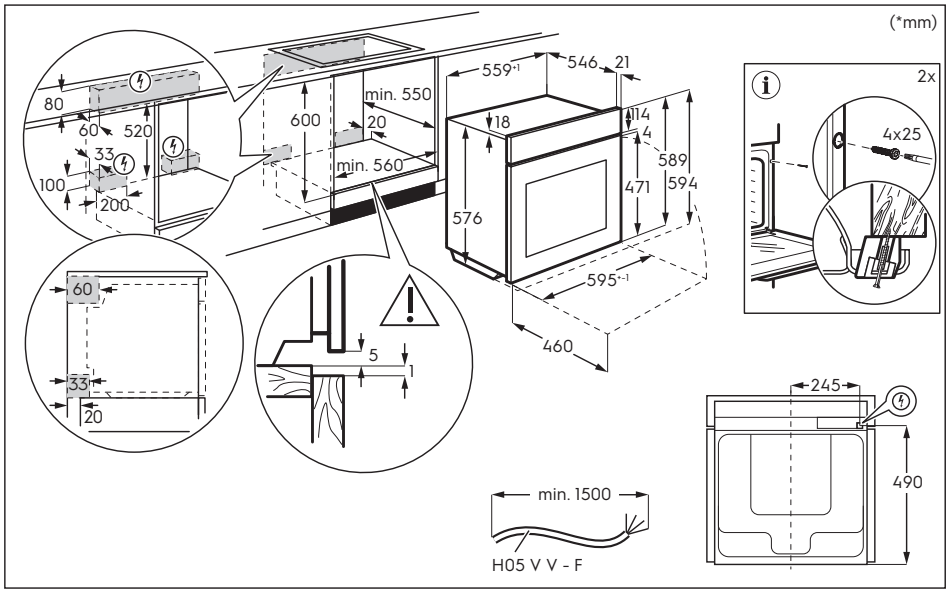

Cabinet

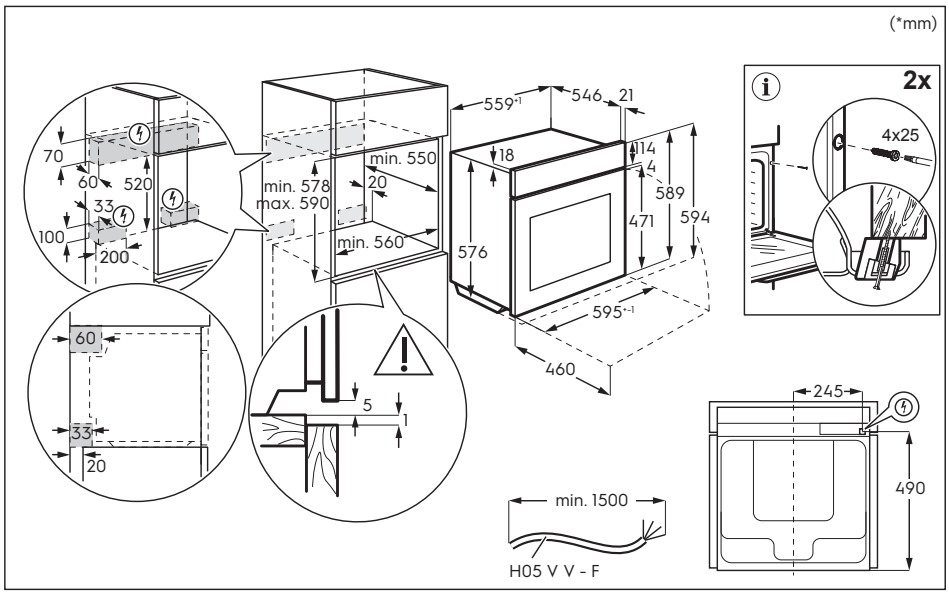

Please note! Dimensions to be used as a guide only. All customers MUST refer to the user manual supplied with the product for detailed installation instructions.

© 2025 Electrolux S.E.A PTE. LTD. ELX_DIM_EVEP6816BF_Nov25

Electrolux