Dimension Guide

Built-in single oven

Model:
EVES6810BF

Dimensions

	width	height	depth
Underbench (mm)	560	600	550
Cabinet (mm)	560	590	550
Product (mm)	595	594	567

Underbench

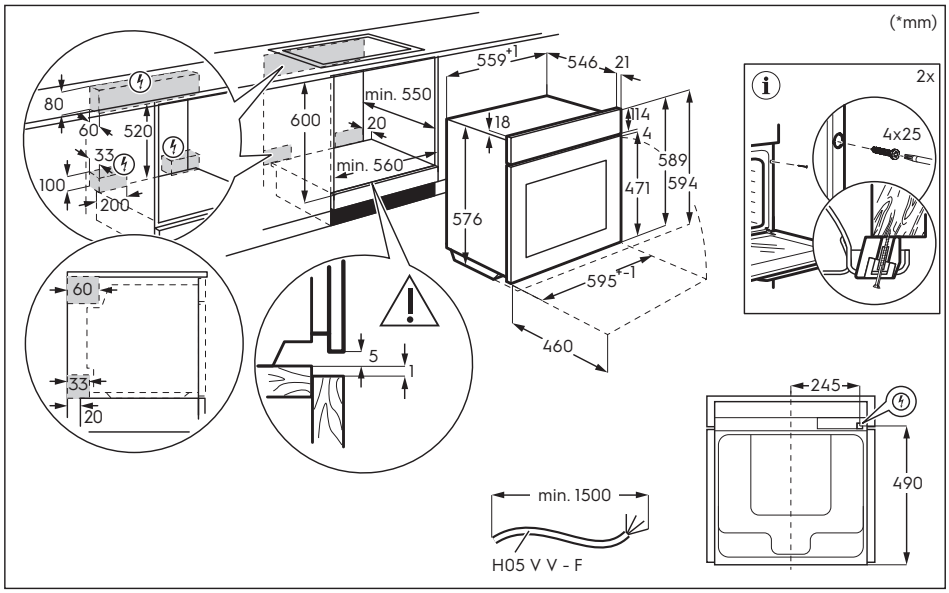

Cabinet

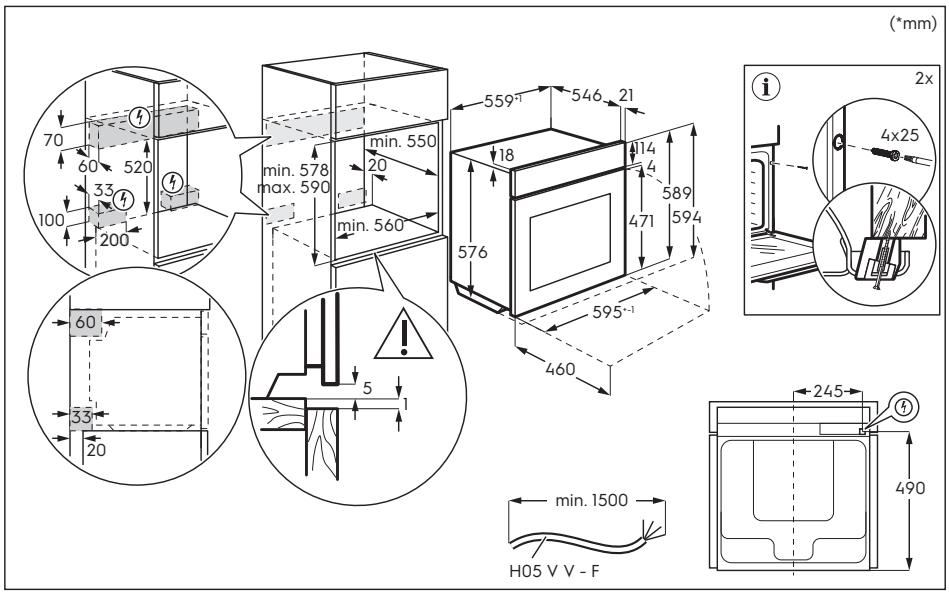

Please note! Dimensions to be used as a guide only. All customers MUST refer to the user manual supplied with the product for detailed installation instructions.

© 2025 Electrolux S.E.A PTE. LTD. ELX_DIM_EVES6810BF_Nov25

800 MealAssist SteamPro

Electrolux